## SIDE ENTRY MODULAR PCB JACK WITH LED 8P PROFILE=13.65MM (FULLY SHIELDED)

### SPECIFICATIONS

**Insulation Resistance:** 500MΩ Min.
**Contact Resistance:** 20mΩ Max.
**Rating Current:** 1.5A Max.
**Rating Voltage:** 120V AC.
**Dielectric Voltage:** 1000 Vrms 60 Sec. Min.
**Temperature Range:** -40ºc / +85ºc
**Durability:** 500 Mating cycles Min.

### MATERIALS

**Housing:** PBT Glass Filled (UL 94V-0)
**Soldering Temperature:** 235ºc
**Color:** Black
**Spring Wire:** Phosphor Bronze
Gold plating Over Nickel
**Shield:** Brass plating Nickel Alloy
**All materials must be RoHS compliant.**

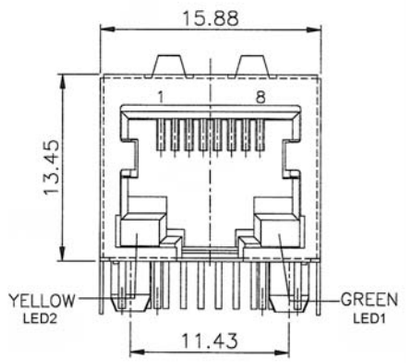


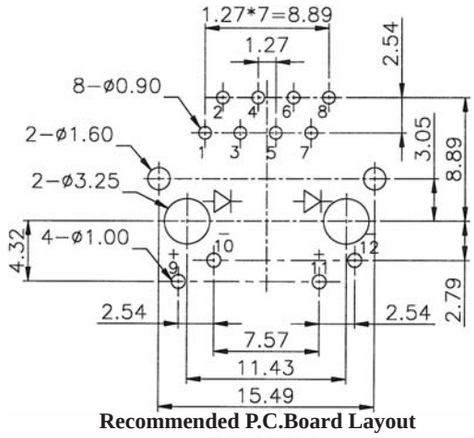


**Recommended P.C.Board Layout (TOP VIEW)**

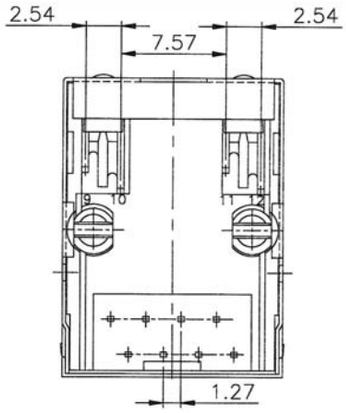


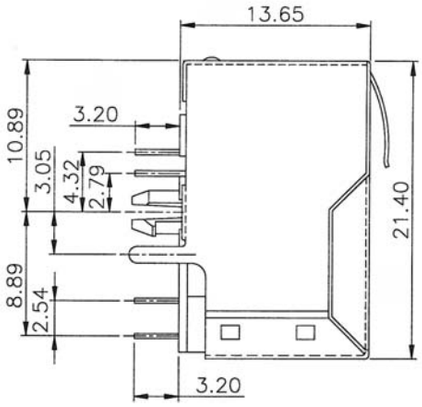


## ORDERING INFORMATION:

**P/N M J 1 Y - 8 8 x B x x**
**1 2 3 4**

1. NO. OF POSITIONS & CONTACTS:
   "88" 8P8C
2. CONTACT FINISH:
   "A" 6 MICROINCH GOLD
   "B" 15 MICROINCH GOLD
   "C" 30 MICROINCH GOLD
   "D" 50 MICROINCH GOLD
3. CODE OF LED1 DESIGNATION:
   N, Y, R, X, 3, 4, 5, 6, 9, 0
4. CODE OF LED2 DESIGNATION:
   N, Y, R, X, 3, 4, 5, 6, 9, 0

| LED Designation: | | | | | |
|---|---|---|---|---|---|
| Code | Forward | Reverse | Code | Forward | Reverse |
| N | Green | —— | 4 | Yellow | Red |
| Y | Yellow | —— | 5 | Green | Yellow |
| R | Red | —— | 6 | Yellow | Green |
| 1 | Green | Orange | 9 | Red | Green |
| 3 | Green | Red | 0 | Red | Yellow |
| X | —— | —— | 8 | Orange | —— |