TOP ENTRY MODULAR PCB JACK WITH COPPER PLATE 8P PROFILE=16.90MM (FULLY SHIELDED)

SPECIFICATIONS

Insulation Resistance: 500MΩ Min.
Contact Resistance: 20mΩ Max.
Rating Current: 1.5A Max.
Rating Voltage: 120V AC.
Dielectric Voltage: 1000 Vrms 60 Sec. Min.
Temperature Range: -40ºc / +85ºc
Durability: 500 Mating cycles Min.

MATERIALS

Housing: PBT Glass Filled (UL 94V-0)
Soldering Temperature: 235ºc
Color: Black
Spring Wire: Phosphor Bronze
Gold plating Over Nickel
Shield: Brass plating Nickel Alloy
All materials must be RoHS compliant.

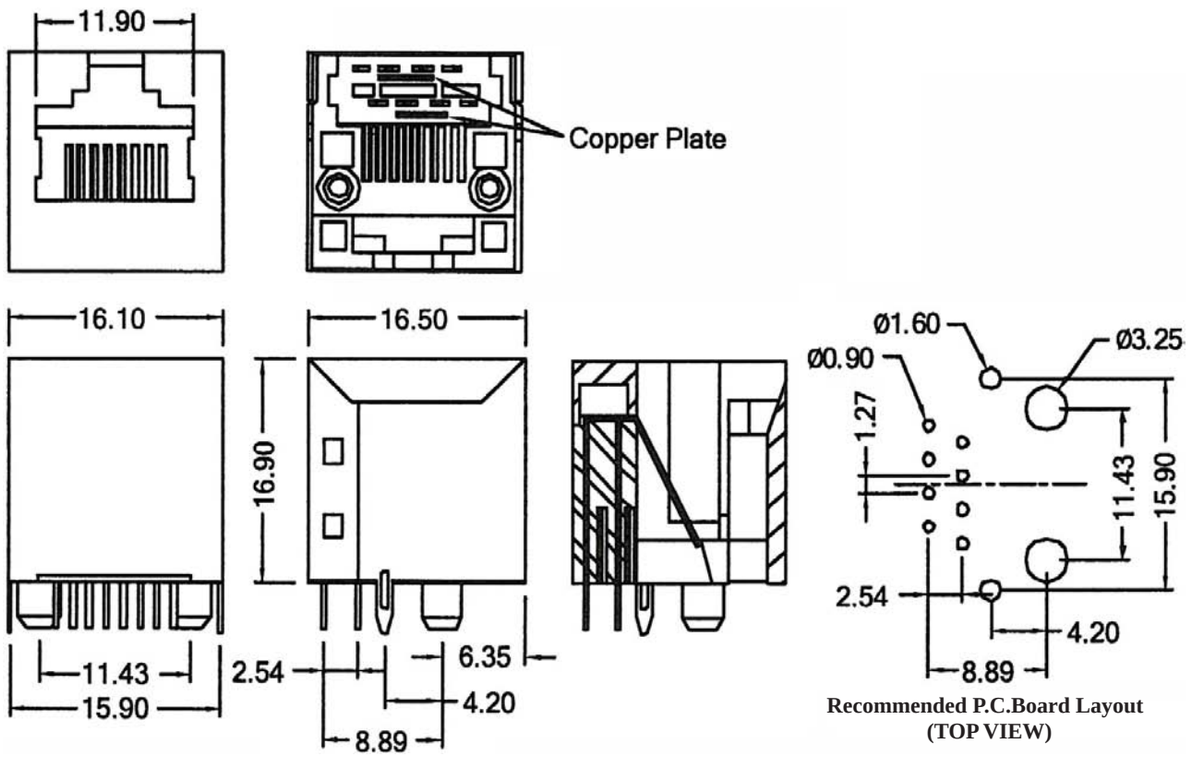

Recommended P.C.Board Layout (TOP VIEW)

ORDERING INFORMATION:

P/N M J 7 D - 8 8 x B
1 2

1. NO. OF POSITIONS & CONTACTS:
   "88" 8P8C
2. CONTACT FINISH:
   "A" 6 MICROINCH GOLD
   "B" 15 MICROINCH GOLD
   "C" 30 MICROINCH GOLD
   "D" 50 MICROINCH GOLD