Ratioplast-Electronics H.Wiedemann GmbH
Jockweg 66, D-32312 Lübbecke
Tel:+49 (0) 5741 23661-0
Fac:+49 (0) 5741 23661-20

USB Female Dip 90 A Type

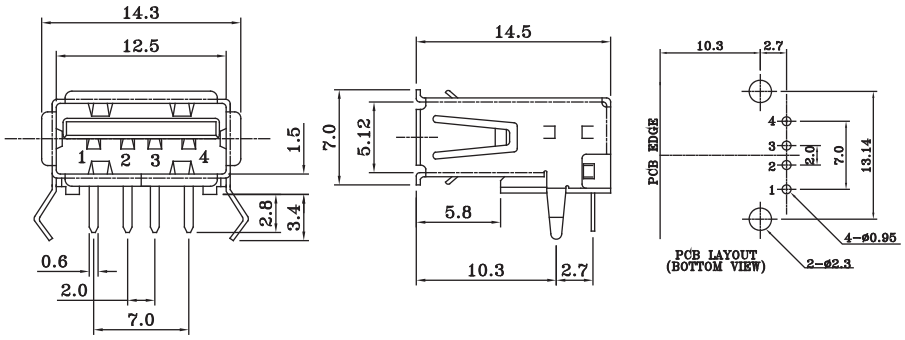

No.	Name	Q'ty	Material	Remarks & Thickness	Finish
1	Housing	1	PBT G.F.		White/Black
2	Pin Term.	4	Copper Alloy T:0.25	Gold:1~3u" ; NT:40~60 ; Tin:120u" (100% Pure Tin of Lead Free Plating)	Gold/Tin Plating
3	Shell	1	Brass T:0.3	NI:2~3u	Nickel Plated

Part No.:USB-001-A□-L

B:Black W:White

USB Female Dip Upright A Type

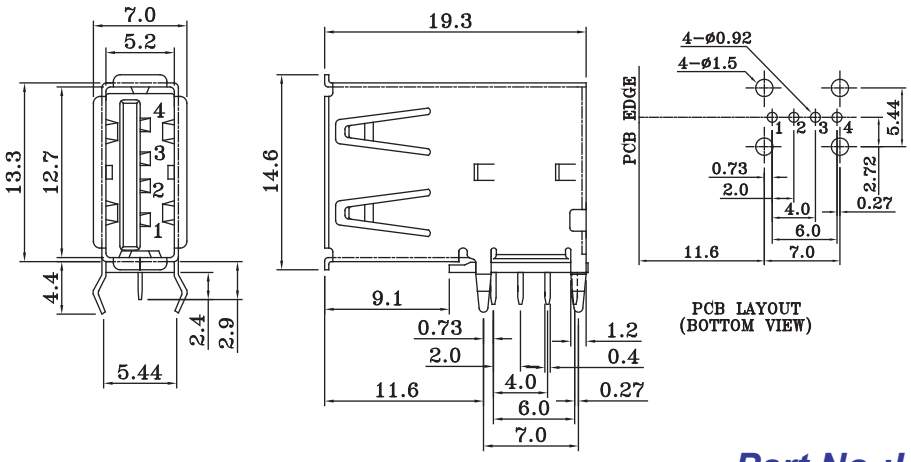

No.	Name	Q'ty	Material	Remarks & Thickness	Finish
1	Housing	1	PBT G.F.		White/Black
2	Pin Term.	4	Copper Alloy T:0.25	NI:1~1.5u;Tin:3u. Gold:1~3u"	Gold/Tin Plated
3	Shell	1	Brass T:0.3	NI:2~3u	Nickel Plated
4	Shell	1	Spcc T:0.3	NI:2~3u	Nickel Plated
5	Bottom Cover	1	PBT G.F.		White

Part No.:USB-001V-A□-L

B:Black W:White

USB Female Dip 180 A Type

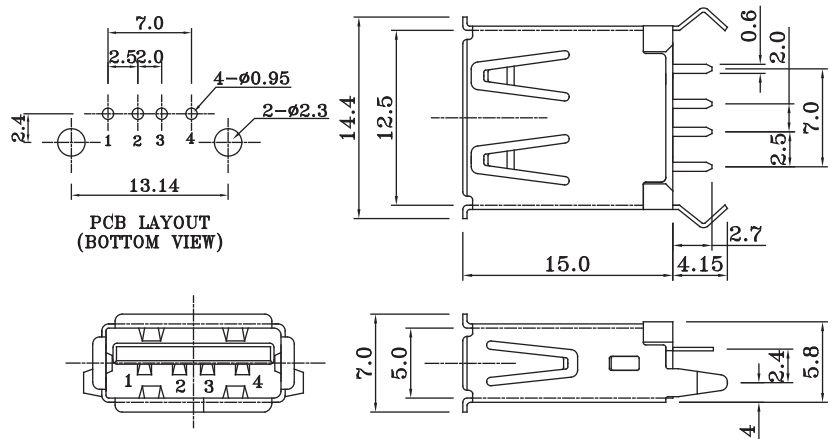

No.	Name	Q'ty	Material	Remarks & Thickness	Finish
1	Housing	1	PBT G.F.		White/Black
2	Pin Term.	4	Copper Alloy T:0.25	NI:1~1.5u;Tin:3u. Gold:1~3u"	Gold/Tin Plated
3	Shell	1	Brass T:0.3	Tin:3~5u	Tin Plated
4	Bottom Cover	1	PBT G.F.		White

Part No.:USB-001K-A□-L

B:Black W:White