Ratioplast-Electronics H.Wiedemann GmbH
Jockweg 66, D-32312 Lübbecke
Tel:+49 (0) 5741 23661-0
Fac:+49 (0) 5741 23661-20



## USB Female Dip 180 B Type

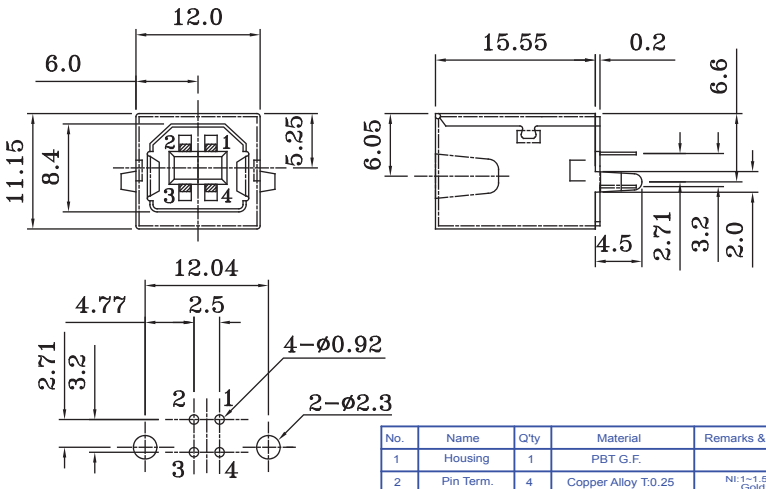

**Part No.:USB-001K-B□-L**

**B:Black W:White**

| No. | Name | Q'ty | Material | Remarks & Thickness | Finish |
|---|---|---|---|---|---|
| 1 | Housing | 1 | PBT G.F. | | White |
| 2 | Pin Term. | 4 | Copper Alloy T:0.25 | NI:1~1.5u ; Tin:3u. Gold:1~3u" | Gold/Tin Plated |
| 3 | Shell | 1 | Brass T=0.3 | NI:2~3u | Nickel Plated |
| 4 | Bottom Cover | 1 | PBT G.F. | | White |

## USB Female SMT 90 B Type

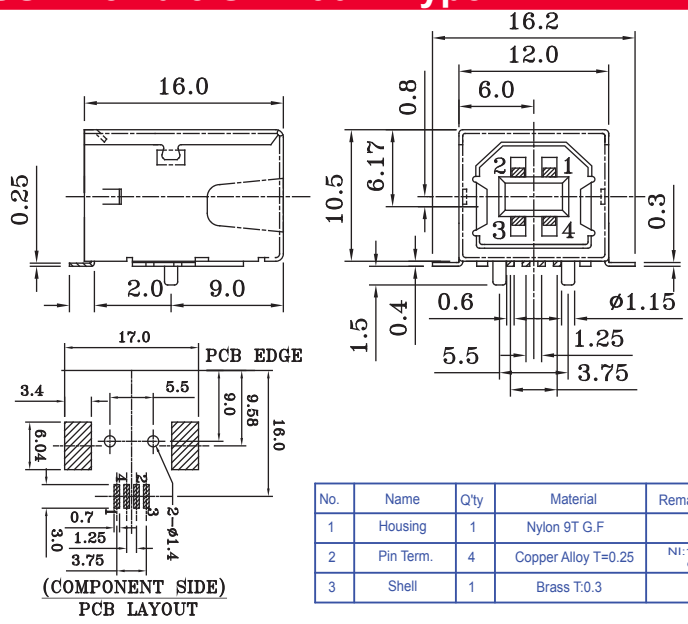


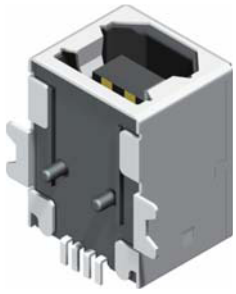

**Part No.:USB-001H-B□-U**

**B:Black W:White**

| No. | Name | Q'ty | Material | Remarks & Thickness | Finish |
|---|---|---|---|---|---|
| 1 | Housing | 1 | Nylon 9T G.F | | White/Black |
| 2 | Pin Term. | 4 | Copper Alloy T=0.25 | NI:1~1.5u ; Tin:3u. Gold:1~3u" | Gold/Tin Plated |
| 3 | Shell | 1 | Brass T:0.3 | NI:2~3u | Nickel Plated |

## USB Female SMT 180 B Type

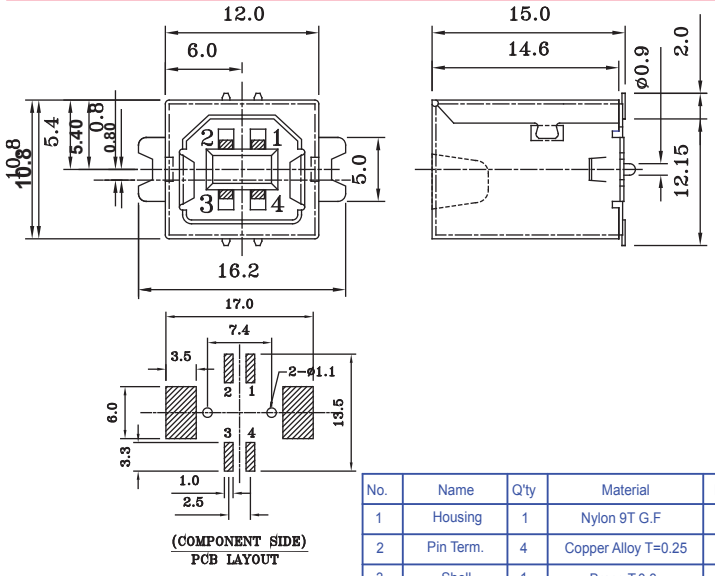


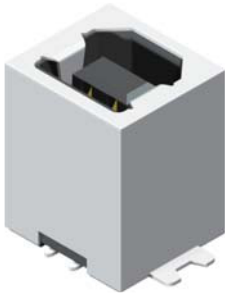

**Part No.:USB-001KH-B□-U**

**B:Black W:White**

| No. | Name | Q'ty | Material | Remarks & Thickness | Finish |
|---|---|---|---|---|---|
| 1 | Housing | 1 | Nylon 9T G.F | | White/Black |
| 2 | Pin Term. | 4 | Copper Alloy T=0.25 | NI:1~1.5u ; Tin:3u. Gold:1~3u" | Gold/Tin Plated |
| 3 | Shell | 1 | Brass T:0.3 | NI:2~3u | Nickel Plated |